Model Number

SJ15-A2

Features

- **15 mm slot width**
- **4-wire DC**

Connection

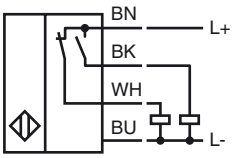

Dimensions

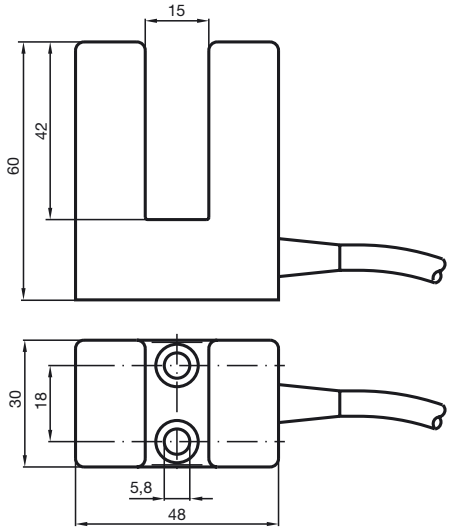

Technical Data

General specifications		
Switching element function		PNP NO/NC
Slot width		15 mm
Depth of immersion (lateral)		17 ... 20 mm
Output polarity		DC
Nominal ratings		
Nominal voltage	U_o	8 V
Operating voltage	U_B	10 ... 30 V DC
Switching frequency	f	0 ... 500 Hz
Reverse polarity protected		reverse polarity protected
Short-circuit protection		pulsing
Voltage drop	U_d	≤ 3 V
Operating current	I_L	0 ... 200 mA
No-load supply current	I_0	≤ 20 mA
Ambient conditions		
Ambient temperature		-25 ... 70 °C (-13 ... 158 °F)
Mechanical specifications		
Connection type		cable PVC , 2 m
Core cross-section		0.75 mm^2
Housing material		PBT
Protection degree		IP67
Compliance with standards and directives		
Standard conformity		
Standards		EN 60947-5-2:2007 IEC 60947-5-2:2007
Approvals and certificates		
UL approval		cULus Listed, General Purpose
CSA approval		cCSAus Listed, General Purpose
CCC approval		Products with a maximum operating voltage of ≤36 V do not bear a CCC marking because they do not require approval.

Release date: 2011-07-27 11:43 Date of issue: 2011-07-27 003795_eng.xml

Copyright Pepperl+Fuchs